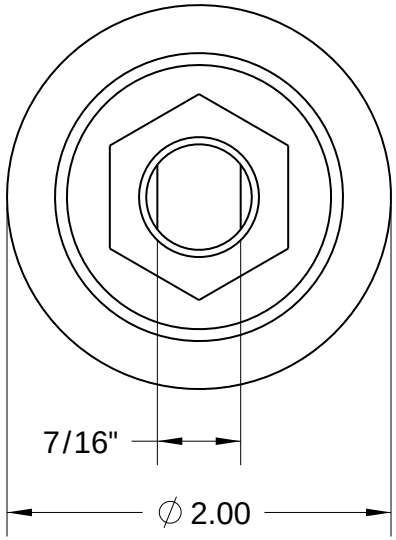

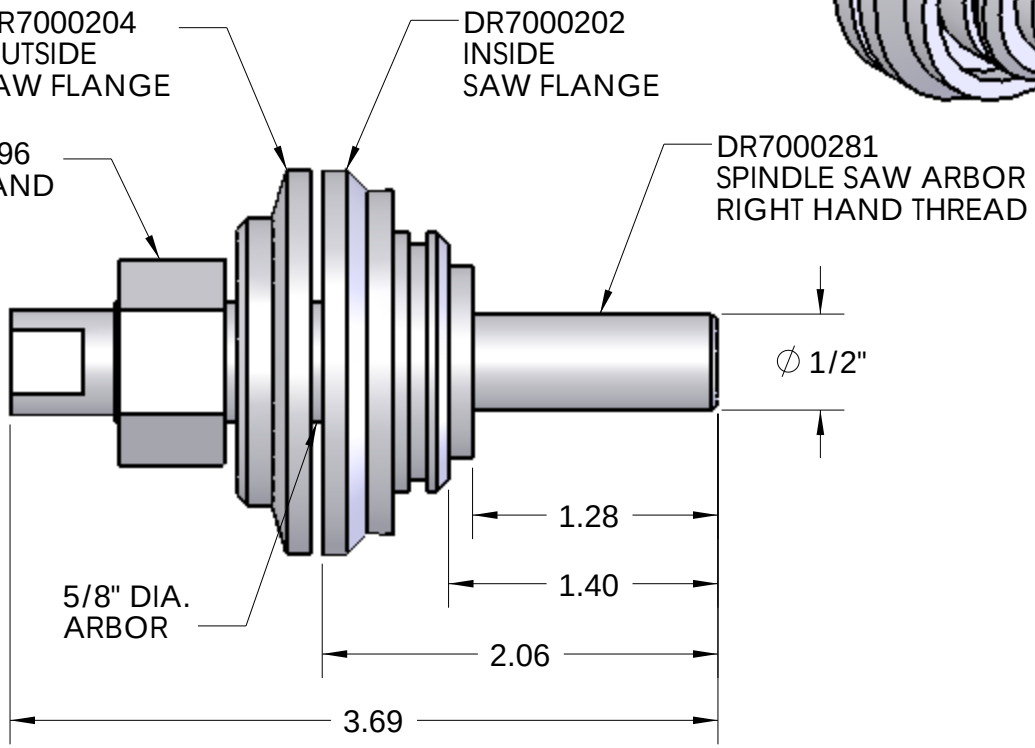

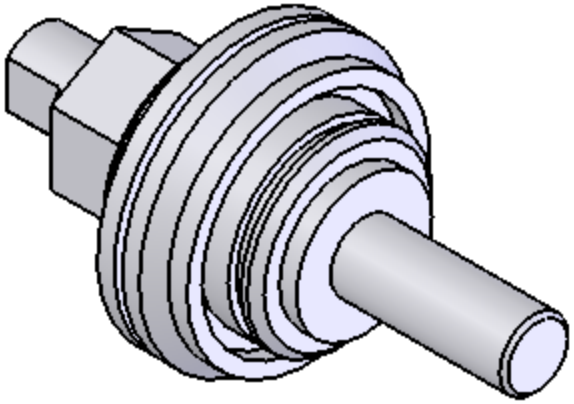

		UNLESS OTHERWISE SPECIFIED:		NAME	DATE
		DIMENSIONS ARE IN INCHES TOLERANCES: FRACTIONAL ± .015 ANGULAR: MACH ± 1° BEND ± TWO PLACE DECIMAL ± .010 THREE PLACE DECIMAL ± .005	DRAWN	JL	5-17-05
			CHECKED		
			ENG APPR.		
			MFG APPR.		
		INTERPRET GEOMETRIC TOLERANCING PER:	Q.A.		
		MATERIAL	COMMENTS:		
NEXT ASSY	USED ON	FINISH			
APPLICATION		DO NOT SCALE DRAWING			

D & R AUTOCHUCK

TITLE:

SPINDLE SAW ARBOR RHT ASSEMBLY

SIZE	DWG. NO.	REV
A	DR7000347	

SCALE: 1:1 | WEIGHT: | SHEET 1 OF 1

PROPRIETARY AND CONFIDENTIAL

THE INFORMATION CONTAINED IN THIS DRAWING IS THE SOLE PROPERTY OF D & R AUTOCHUCK. ANY REPRODUCTION IN PART OR AS A WHOLE WITHOUT THE WRITTEN PERMISSION OF D & R AUTOCHUCK IS PROHIBITED.

5 4 3 2 1